One or more of the following US patent numbers may apply:
9226356, 9171455, 9115876, 9091424, 8979304, 8246202

GLOBAL TECHLED

Simply Universal

SR16-6R1

The World Leader in LED Solutions

GTL-WP-WPA15

[30W-95W LED Wall Pack Fixture]

Description:

Architectural design in a small die cast aluminum wall pack with hinged front frame, clear molded prismatic borosilicate glass lens, and powder coat finish. Stainless steel hinge pins and safety cable for easy re-lamping, cast-in mounting template

Specification Features:

- CSA listed for damp locations.
- Custom colors available upon request.
- Specifications subject to change without notice.

Input Voltage:

120-277VAC driver input.

347-480VAC driver available.

Without driver modules runs on 24VDC.

Housing:

Die cast aluminum housing & hinged front frame with stainless steel hinge pins, 1⁄2 coin plugs with O-rings for conduit & photocell, textured architectural bronze powdercoat finish over a chromate conversion coating, includes safety cable to prevent front frame impact when relamping.

Additional Details:

Lens:
Molded prismatic borosilicate glass lens.

Mounting:
Cast-in template for mounting directly over a 4 recessed outlet box, or use 1⁄2 surface conduit, includes Easy-Hang "Two Hands Free" Wall-Mounting Plate with leveling device on back.

LED Module Compatibility

Product	Output Setting	LED Chip Drive Current [mA]	Rated Lumens [Lm]	Rated Watts [W]
GTSOL5498 x 1	HI	700	9447	95
GTSOL5498 x 1	MH	525	8999	85
GTSOL5498 x 1	ML	350	7814	75
GTSOLM21 x 1	HI	700	5910	60
GTSOLM21 x 1	MH	600	4594	50
GTSOLM21 x 1	ML	500	3742	40
GTSOLM21 x 1	LO	400	2679	30

Accessories

Catalog #	Description
WPA15WG	Wire Guard for WPA15
OPT20	20º Plastic Reflector
OPT40	40º Plastic Reflector
OPT40W	40º Plastic Reflector, Wide
OPT60	60º Plastic Reflector
IP67	IP67 Rated LED Engine
GT-LSP-120	Surge Protector. 120 V 10 kA Parallel. 20kA maximum discharge current.
GT-LSP-240	Surge Protector. 240 V 10 kA Parallel. 20kA maximum discharge current.
GT-LSP-277	Surge Protector. 277 V 10 kA Parallel. 20kA maximum discharge current.
GT-LSP-347	Surge Protector. 347 V 10 kA Parallel. 20kA maximum discharge current.
GT-LSP-480	Surge Protector. 480 V 10 kA Parallel. 20kA maximum discharge current.

Additional Information:

Operating Temperature Range:
-40°C to 55°C Nominal

Optics offered for different distributions.
(Dist. = 120° w/o secondary optics)

L70 > 150,000Hrs.

Life Sync adjusts module to operate at max performance in any given environment

Photometrics:
.ies files available

Surge Protector:
- Required for ALL 347V-480V applications in order to qualify for Warranty
- Recommended for all outdoor applications

Warranty: Driver = 5 years
Solstice Light Engine = 10 years
Fixture = 10 years

MADE IN USA

RoHS COMPLIANT

0-10 VDC DIMMING CAPABLE

Fully Compliant with ARRA Buy American Requirements. Made in the USA.

Pricing Information

GTL-WP-WPA15

[30W-95W LED Wall Pack Fixture]

SR16-6R1

Details

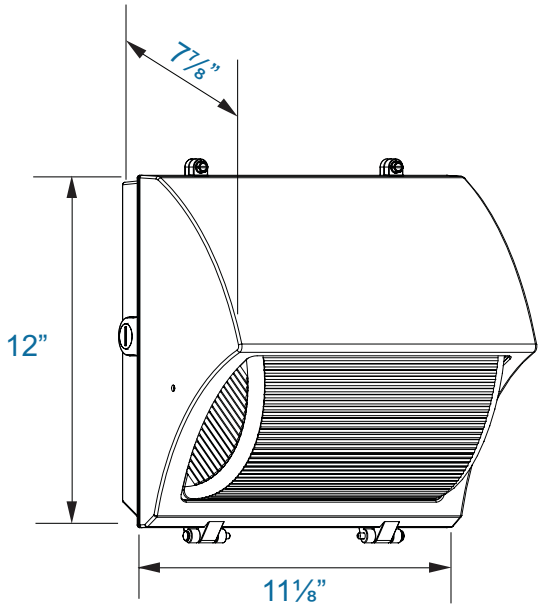

Features

- Life Sync
  - Module Temp Protection
  - Lumen Depreciation Maintenance
- Wattage Selections (on board)
- On Board Programming
  - 5-6-1 Energy Saving Program
  - 0-10V Dimming
- Lumiled Luxeon LED chips
- Active Thermal Management
- Optical Distribution Options
- -40°C to 55°C Nominal Operating Temperature
- 10 Year Warranty

Ordering Code Example:

GTL-WP-WP15 - M21 - LO - SV - BL - NL / GT-LSP-277

Fixture	Module	Wattage	Voltage		CCT	Lens	Accs	
GTL-WP-WPA15	**5498**	**HI** (95W)	**SV** (120V-277V)		**GR** (5000K) [70CRI]	**NL** = No Lens	**WPA15WG**	
			HV (347V-480V)		**BR** (5000K) [80CRI]	**10D** = 10D Lens	**OPT20**	
	5498	**MH** (85W)	**SV** (120V-277V)		**YW** (4100K) [70CRI]	**25D** = 25D Lens	**OPT40**	
			HV (347V-480V)		**BL** (4000K) [80CRI]	**50D** = 50D Lens	**OPT40W**	
	5498	**ML** (75W)	**SV** (120V-277V)		**RD** (3500K) [80CRI]	**75D** = 75D Lens	**OPT60**	
			HV (347V-480V)		**PR** (3000K) [95CRI]	**360D** = 360D Lens	**IP67** = M21*	
	M21	**HI** (60W)	**SV** (120V-277V)		**OR** (2700K) [80CRI]	**360s** = 360 Square Lens	**IP67** =5498*	
			HV (347V-480V)		**GRO** (Grow)†	**T2** = Type II Lens	**GT-LSP-120**	
	M21	**MH** (50W)	**SV** (120V-277V)		**AMB** (Amber)†	**T3** = Type III Lens	**GT-LSP-240**	
			HV (347V-480V)		**AQU** (Aquarium)†		**GT-LSP-277**	
	M21	**ML** (40W)	**SV** (120V-277V)		**RYB** (Royal Blue)†		**GT-LSP-347**	
			HV (347V-480V)				**GT-LSP-480**	
	M21	**LO** (30W)	**SV** (120V-277V)					
			HV (347V-480V)					

* IP67 upgrade for module + fan (only NL, 10D, 25D, 50D & 75D)

† Upcharges not included in MSRP Price

Please see previous page for accessory information

Please note, prices may change with quantity

Fully Compliant with ARRA Buy American Requirements. Made in the USA.